Dunbarton™ CORPORATION

868 MURRAY ROAD, DOTHAN, AL 36303

L. F. SCHMIDT LICENSE No. 43409 STATE OF FLORIDA PROFESSIONAL ENGINEER

Digitally signed by Lyndon F Schmidt
Date: 2026.07.01 12:39:48 -04'00'

This item has been digitally signed and sealed by **L. F. Schmidt, P.E.** on the date adjacent to the seal.

Printed copies of this document are not considered signed and sealed and the signature must be verified on any electronic copies.

THIS PRODUCT APPROVAL IS VALID ONLY FOR THE STATE OF FLORIDA

"REDIFLEX"

TWO-PIECE STEEL FRAME SYSTEM UTILIZING A PLASTPRO OPAQUE FIBERGLASS DOOR PANEL

"IMPACT"

GENERAL NOTES

1. This product has been evaluated and is in compliance with the 9th Edition (2026) Florida Building Code (FBC) structural requirements excluding the "High Velocity Hurricane Zone" (HVHZ).
2. Product anchors shall be as listed and spaced as shown on details. Anchor embedment to base material shall be beyond wall dressing or stucco.
3. When used in areas requiring wind borne debris protection this product complies with FBC Sections 1609.1.2 & R301.2.1.2 and does not require an impact resistant covering. This product meets missile level "D" and includes Wind Zone 4 as defined in ASTM E 1996 and FBC Sections 1609.1.2.2 & R301.2.1.2.1.1.
4. For 2x stud framing construction, anchoring of these units shall be the same as that shown for 2x buck masonry construction.
5. Site conditions that deviate from the details of this drawing require further engineering analysis by a licensed engineer or registered architect.

TABLE OF CONTENTS

SHEET #	DESCRIPTION
1	Typical elevations, design pressures & general notes
2	Steel frame cross sections & details
3	Door panel details
4	Horizontal cross sections
5	Vertical cross sections
6	Buck and frame anchoring
7	Bill of materials and components

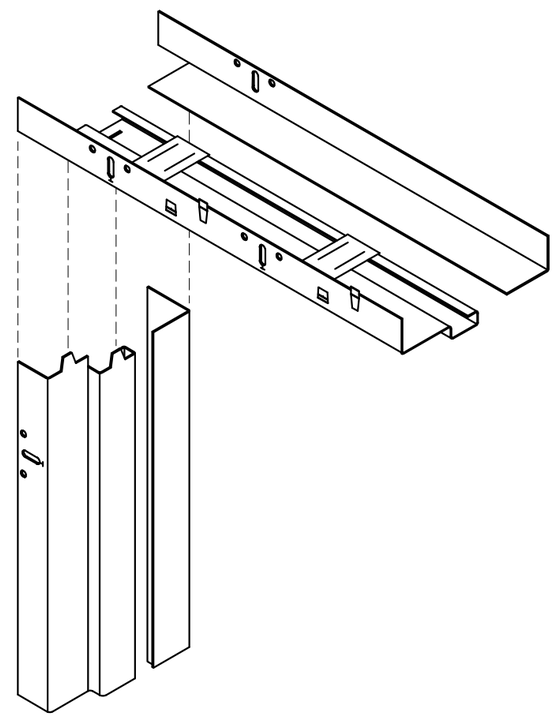

REDIFLEX TWO-PIECE

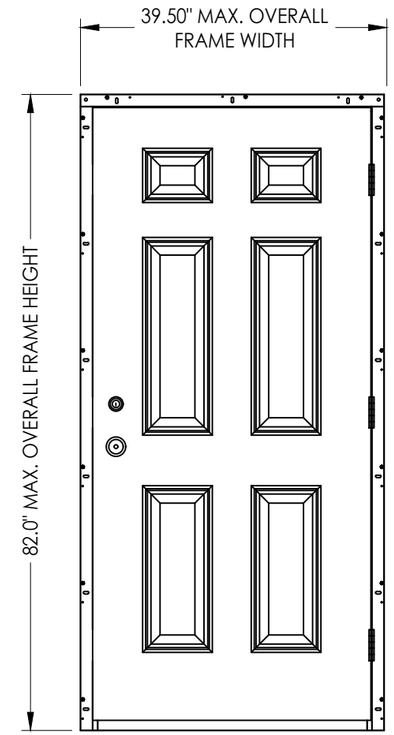

INSWING OR OUTSWING

OVERALL FRAME DIMENSION	DESIGN PRESSURE (PSF)	
	POSITIVE	NEGATIVE
39.50" X 82.0"	+ 50.0	- 50.0

Documents Prepared By:
Lyndon F. Schmidt
P.E. No. 43409

R.W. BUILDING CONSULTANTS, INC.
P.O. Box 230, Valrico, FL 33595
Phone No.: 813.659.9197
FBPE Registry No. 9813

PRODUCT: DUNBARTON REDIFLEX TWO-PIECE STEEL FRAME

PART OR ASSEMBLY: TYPICAL ELEVATIONS, DESIGN PRESSURES & GENERAL NOTES

NO.	DATE	REVISIONS	BY
4	7/01/26	UPDATE TO 9TH ED. (2026) FBC	LFS
3	7/06/23	UPDATE TO 8TH ED. (2023) FBC	LFS
2	8/11/20	UPDATE TO 7TH ED. (2020) FBC	DAC
1	9/30/17	UPDATE TO 6TH ED. (2017) FBC	LFS

DATE: 3/30/15
SCALE: N.T.S.
DWG. BY: JK
CHK. BY: LFS
DRAWING NO.: FL-15341.10
SHEET 1 OF 7

© 2015 R.W. BUILDING CONSULTANTS INC.

G:\2023 FBC Drawings 1.26.26\Dunbarton Corp\FL-15341 R10 Rediflex\FL-15341.9-10.dwg

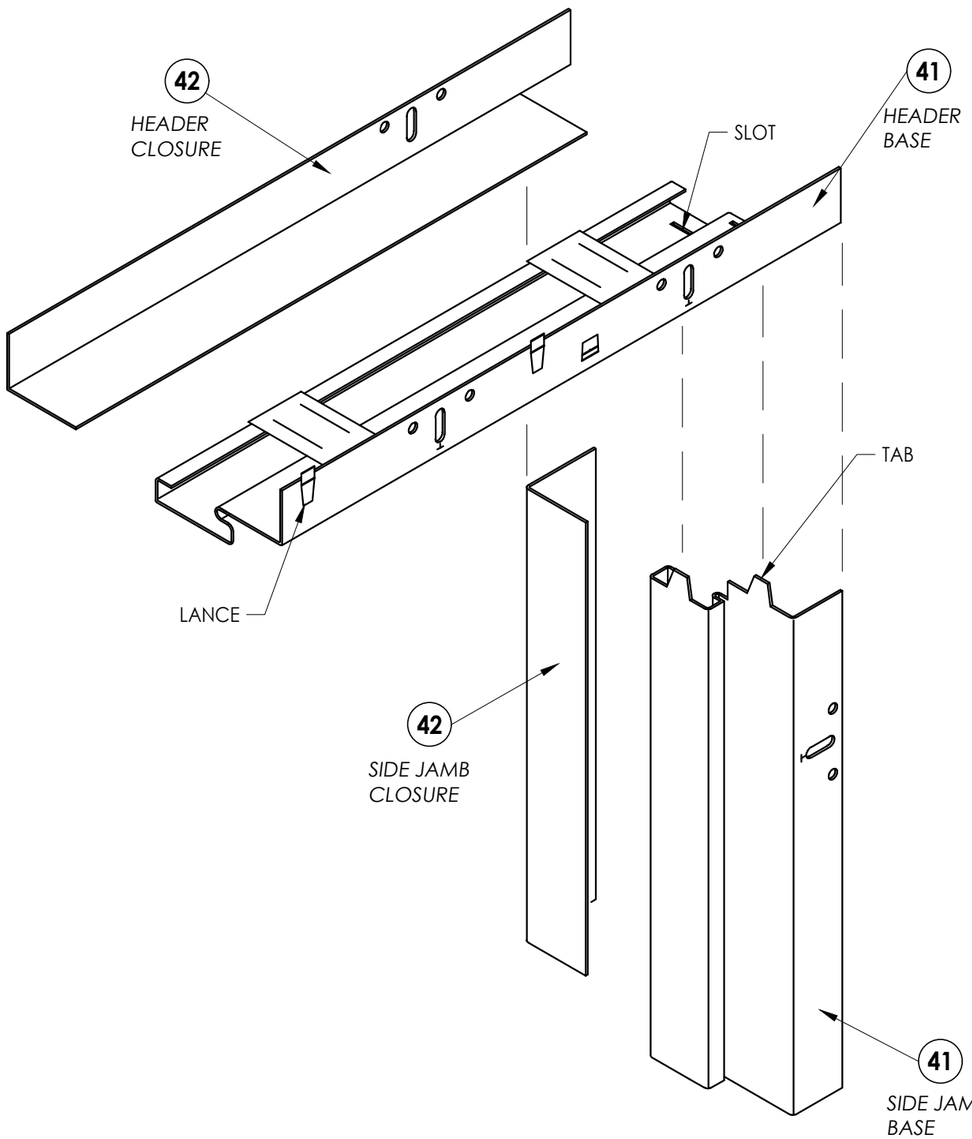

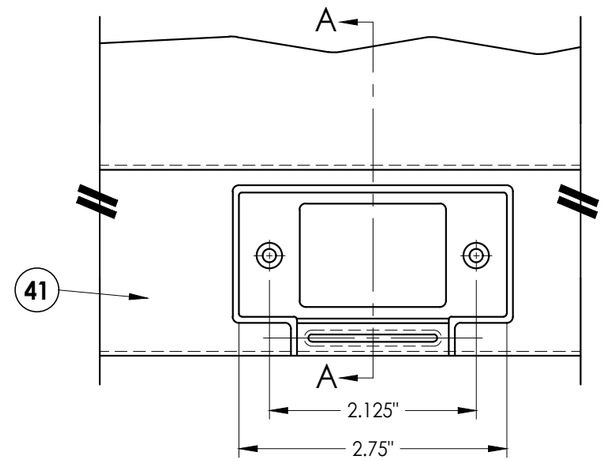

STRIKE AT LATCH

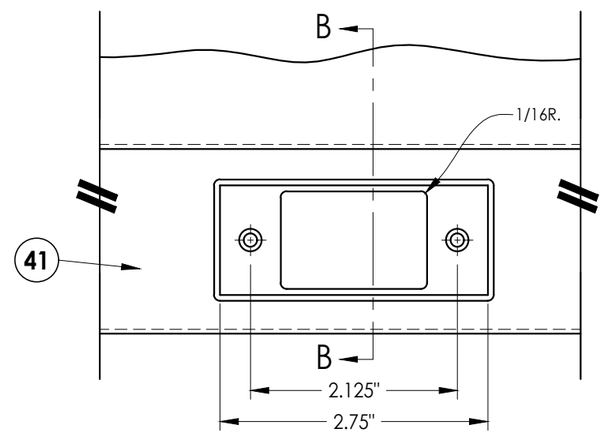

STRIKE AT DEADBOLT

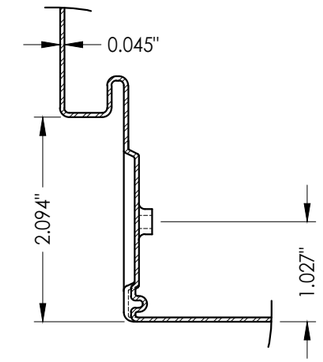

SECTION A-A

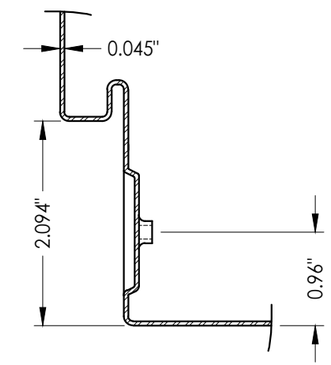

SECTION B-B

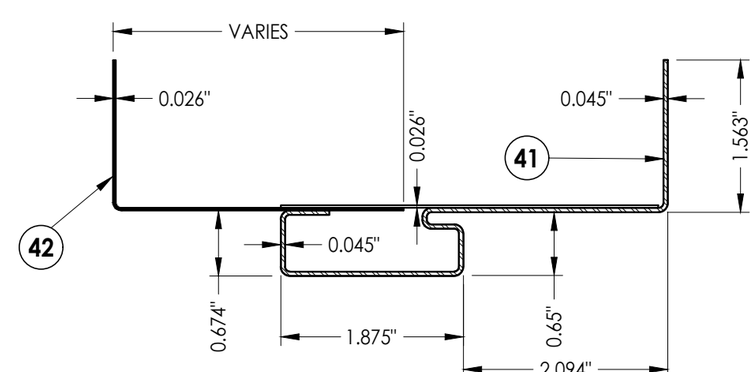

REDIFLEX FRAME DETAIL

NOTES:

1. HEADER AND SIDE BASE JAMB (41) MINIMUM 20 GA. GALV. STEEL.
2. HEADER AND SIDE CLOSURE JAMB (42) MINIMUM 22 GA. GALV. STEEL.
3. FRAME SHOWN WITHOUT OPTIONAL STEEL TRIM CASING.
4. NON-KERF FRAME DO NOT MEET AIR AND WATER CRITERIA.

Documents Prepared By:
Lyndon F. Schmidt
P.E. No. 43409

RW BUILDING CONSULTANTS, INC.
P.O. Box 230, Valrico, FL 33595
Phone No.: 813.659.9197
FBPE Registry No. 9813

PRODUCT: DUNBARTON REDIFLEX TWO-PIECE STEEL FRAME

PART OR ASSEMBLY: STEEL FRAME CROSS SECTIONS & DETAILS

REVISIONS

NO.	DATE		BY
4	7/01/26	UPDATE TO 9TH ED. (2026) FBC	LFS
3	7/06/23	UPDATE TO 8TH ED. (2023) FBC	LFS
2	8/11/20	UPDATE TO 7TH ED. (2020) FBC	DAC
1	9/30/17	UPDATE TO 6TH ED. (2017) FBC	LFS

DATE: 3/30/15
SCALE: N.T.S.
DWG. BY: JK
CHK. BY: LFS
DRAWING NO.: FL-15341.10
SHEET 2 OF 7

© 2015 R.W. BUILDING CONSULTANTS INC.

G:\2023 FBC Drawings 1.26.26\Dunbarton Corp\FL-15341 R10 Rediflex\FL-15341.9-10.dwg

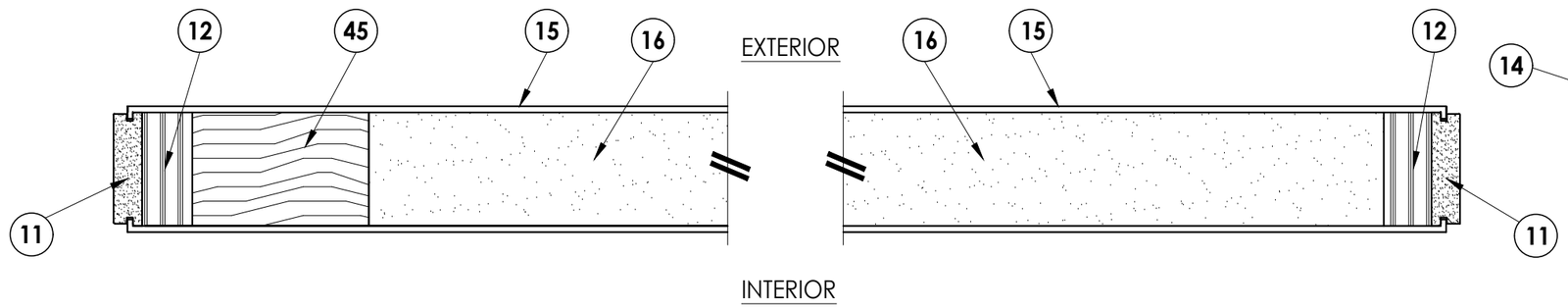

2/3 HORIZONTAL CROSS SECTION

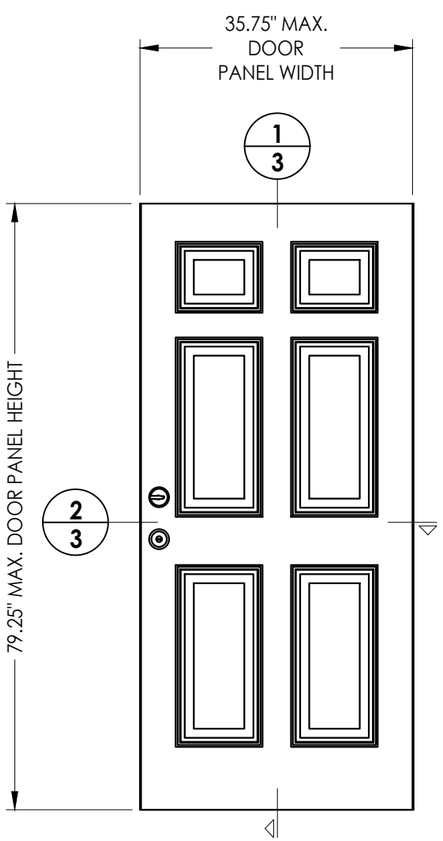

50 FIBERGLASS DOOR PANEL
By: Plastpro Inc.

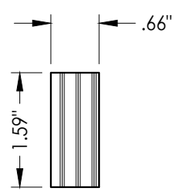

12 LATCH & HINGE STILE
LVL wood reinforcement

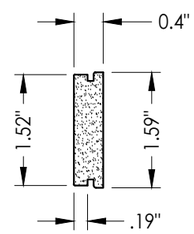

11 LATCH / HINGE STILE
Cellular pvc

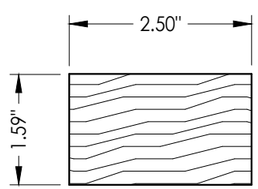

45 REINF. WOOD
For lock

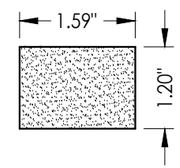

14 DOOR TOP RAIL
Cellular pvc

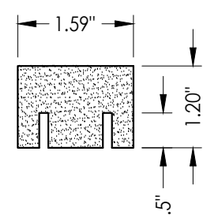

13 DOOR BOTTOM RAIL
Cellular pvc

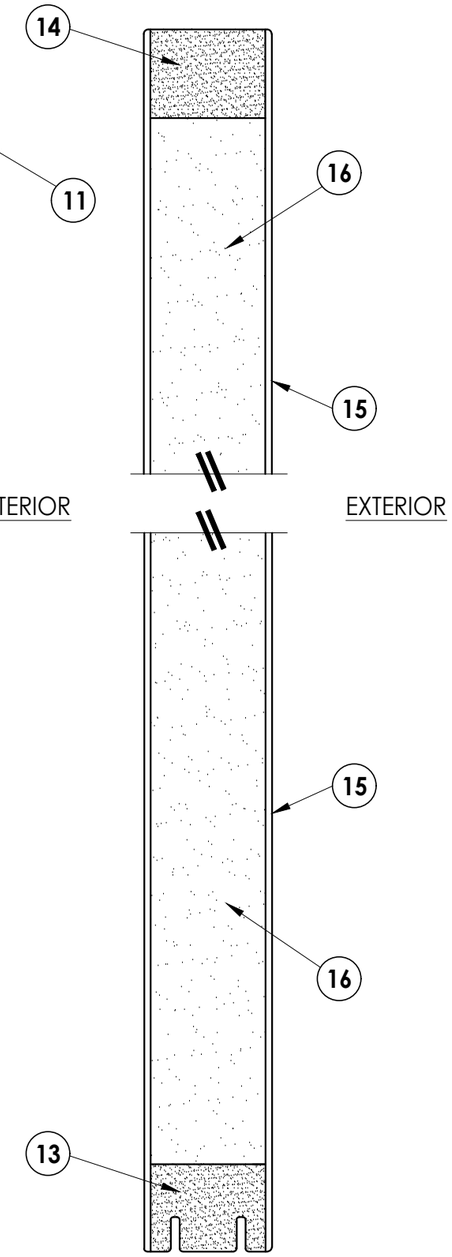

1/3 VERTICAL CROSS SECTION

Documents Prepared By:
Lyndon F. Schmidt
P.E. No. 43409

RW BUILDING CONSULTANTS, INC.
P.O. Box 230, Valrico, FL 33595
Phone No.: 813.659.9197
FBPE Registry No. 9813

PRODUCT: DUNBARTON REDIFLEX TWO-PIECE STEEL FRAME

PART OR ASSEMBLY: DOOR PANEL DETAILS

NO.	DATE	REVISIONS	BY
4	7/01/26	UPDATE TO 9TH ED. (2026) FBC	LFS
3	7/06/23	UPDATE TO 8TH ED. (2023) FBC	LFS
2	8/11/20	UPDATE TO 7th ED. (2020) FBC	DAC
1	9/30/17	UPDATE TO 6TH ED. (2017) FBC	LFS

DATE: 3/30/15
SCALE: N.T.S.
DWG. BY: JK
CHK. BY: LFS
DRAWING NO.: FL-15341.10
SHEET 3 OF 7

© 2015 R.W. Building Consultants Inc.

G:\2023 FBC Drawings 1.26.26\Dunbarton Corp\FL-15341 R10 Rediflex\FL-15341.9-10.dwg

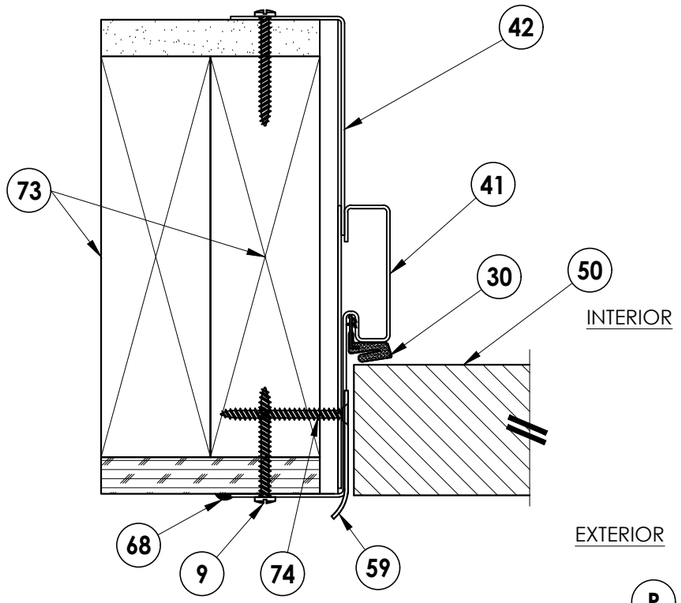

1/4 **HORIZONTAL CROSS SECTION**

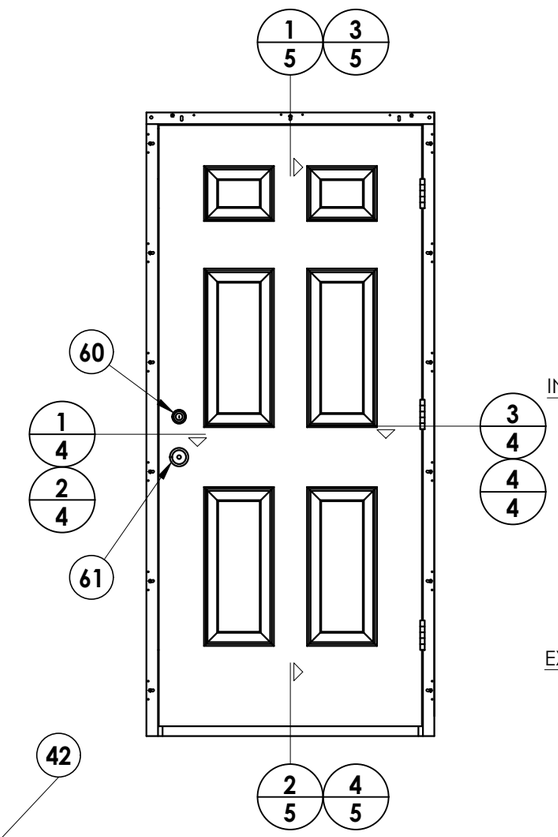

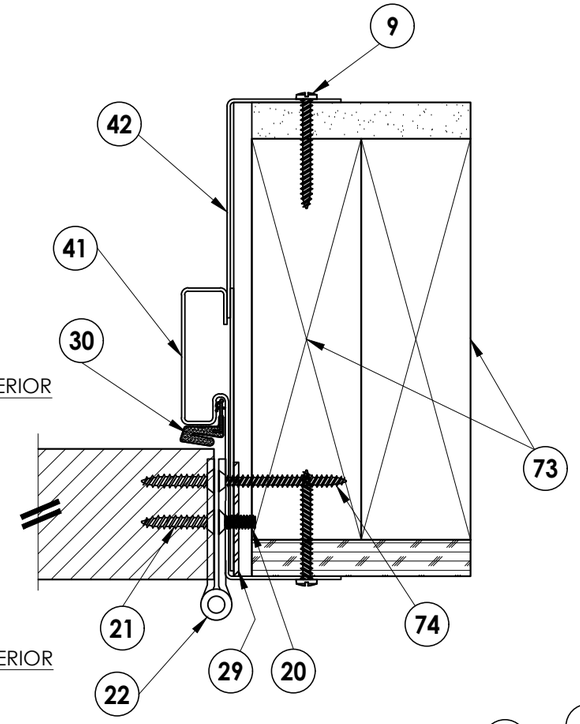

3/4 **HORIZONTAL CROSS SECTION**

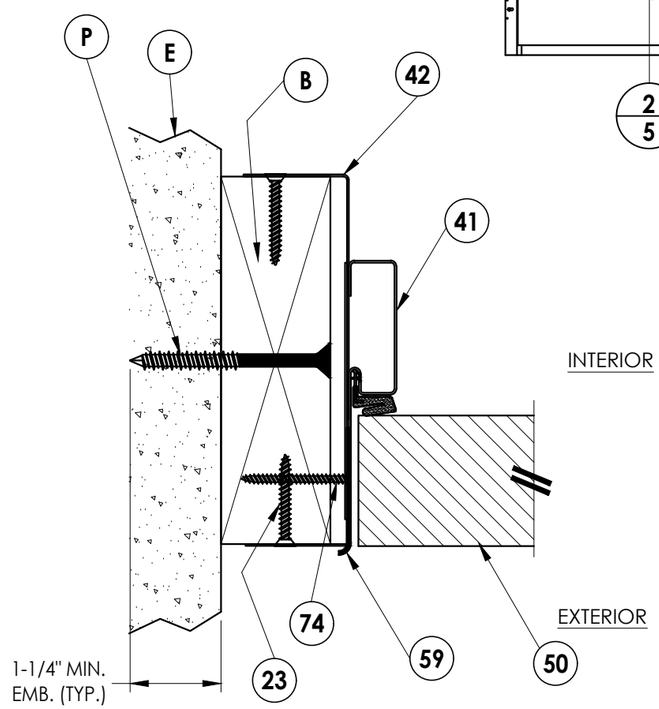

2/4 **HORIZONTAL CROSS SECTION**
2X wood buck @ latch

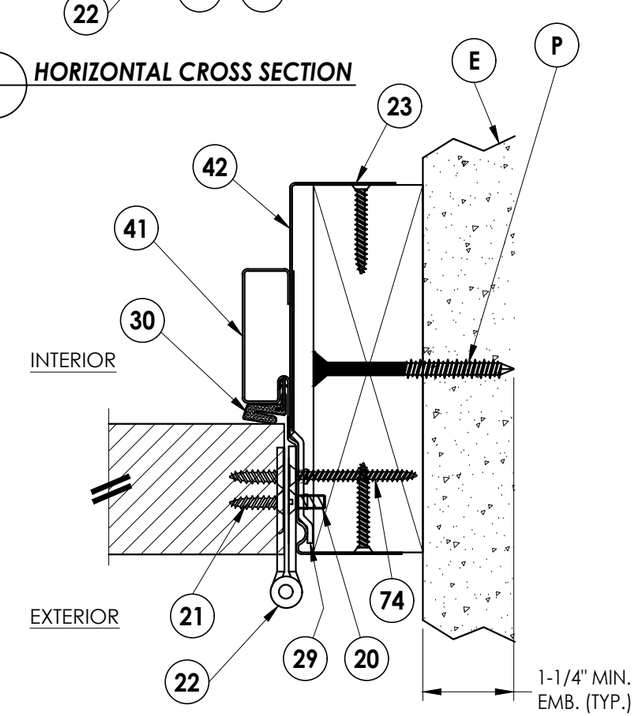

4/4 **HORIZONTAL CROSS SECTION**
2X wood buck @ hinge

Documents Prepared By:
Lyndon F. Schmidt
P.E. No. 43409

R.W. BUILDING CONSULTANTS, INC.
P.O. Box 230, Valrico, FL 33595
Phone No.: 813.659.9197
FBPE Registry No. 9813

PRODUCT: DUNBARTON REDIFLEX TWO-PIECE STEEL FRAME

PART OR ASSEMBLY: HORIZONTAL CROSS SECTIONS

REVISIONS

NO.	DATE		BY
1	9/30/17	UPDATE TO 6TH ED. (2017) FBC	LFS
2	8/11/20	UPDATE TO 7TH ED. (2020) FBC	DAC
3	7/06/23	UPDATE TO 8TH ED. (2023) FBC	LFS
4	7/01/26	UPDATE TO 9TH ED. (2026) FBC	LFS

DATE: 3/30/15
SCALE: N.T.S.
DWG. BY: JK
CHK. BY: LFS
DRAWING NO.: FL-15341.10
SHEET 4 OF 7

© 2015 R.W. Building Consultants Inc.

G:\2023 FBC Drawings 1.26.26\Dunbarton Corp\FL-15341 R10 Rediflex\FL-15341.9-10.dwg

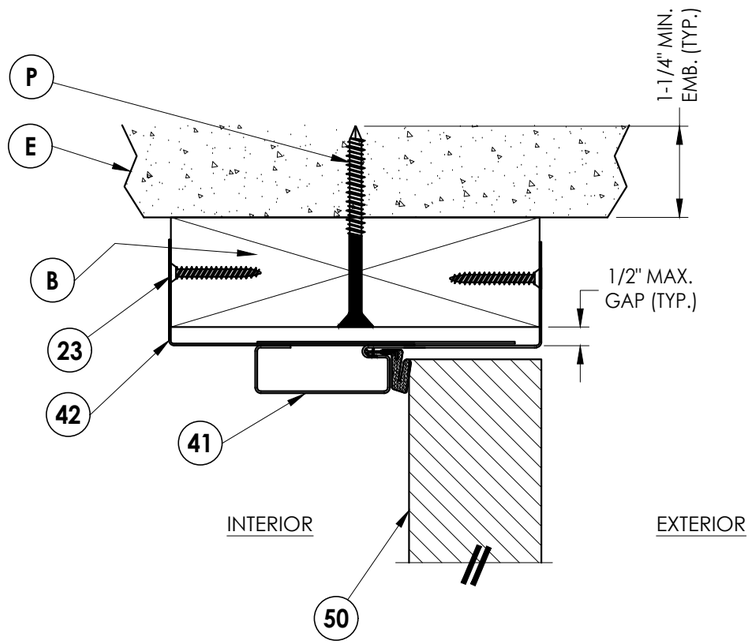

1/5 VERTICAL CROSS SECTION
Shown w/ wood buck

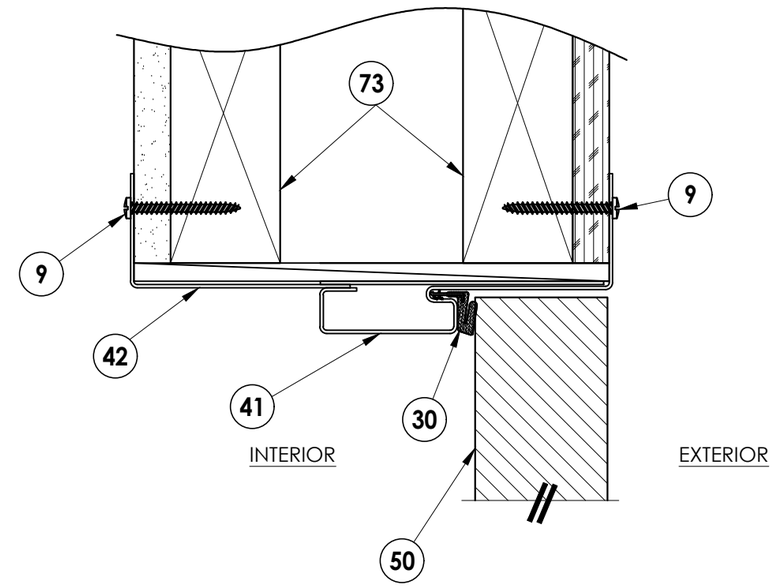

3/5 VERTICAL CROSS SECTION

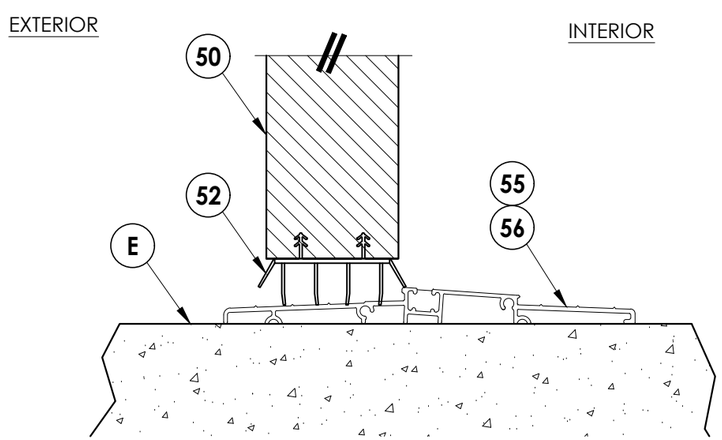

2/5 VERTICAL CROSS SECTION

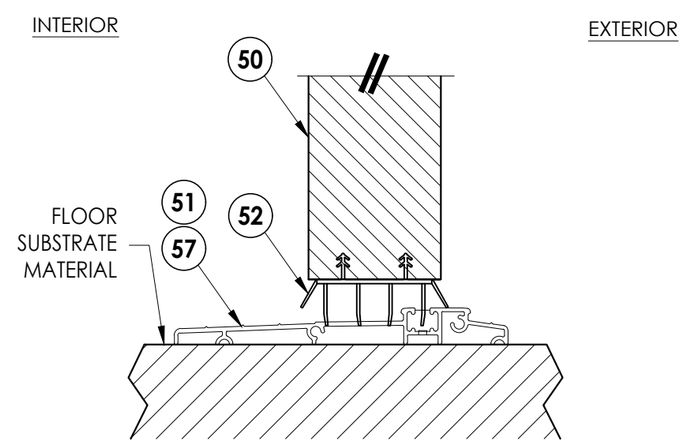

4/5 VERTICAL CROSS SECTION

Documents Prepared By:
Lyndon F. Schmidt
P.E. No. 43409
R.W. BUILDING CONSULTANTS, INC.
P.O. Box 230, Valrico, FL 33595
Phone No.: 813.659.9197
FBPE Registry No. 9813

PRODUCT: DUNBARTON REDIFLEX TWO-PIECE STEEL FRAME

PART OR ASSEMBLY: VERTICAL CROSS SECTIONS

NO.	DATE	REVISIONS	BY
4	7/01/26	UPDATE TO 9TH ED. (2026) FBC	LFS
3	7/06/23	UPDATE TO 8TH ED. (2023) FBC	LFS
2	8/11/20	UPDATE TO 7TH ED. (2020) FBC	DAC
1	9/30/17	UPDATE TO 6TH ED. (2017) FBC	LFS

DATE: 3/30/15
SCALE: N.T.S.
DWG. BY: JK
CHK. BY: LFS
DRAWING NO.: FL-15341.10
SHEET 5 OF 7

© 2015 R.W. BUILDING CONSULTANTS INC.

G:\2023 FBC Drawings 1.26.26\Dunbarton Corp\FL-15341 R10 Rediflex\FL-15341.9-10.dwg

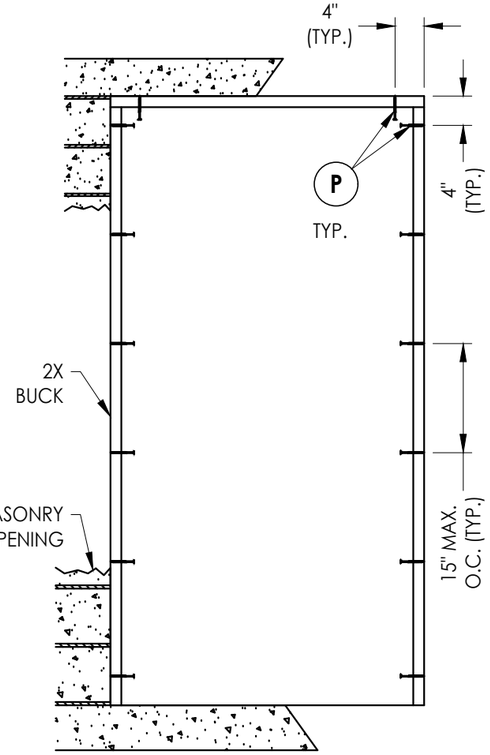

BUCK ANCHORING

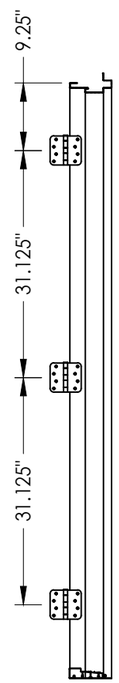

HINGE JAMB

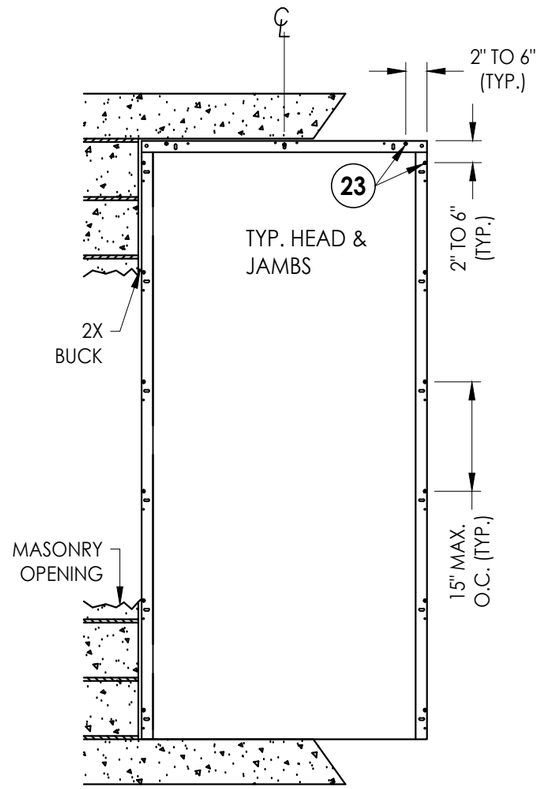

FRAME ANCHORING
2X MASONRY

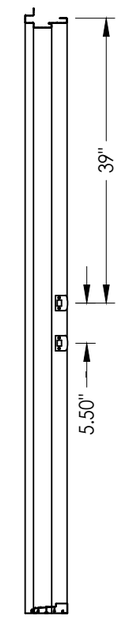

STRIKE JAMB

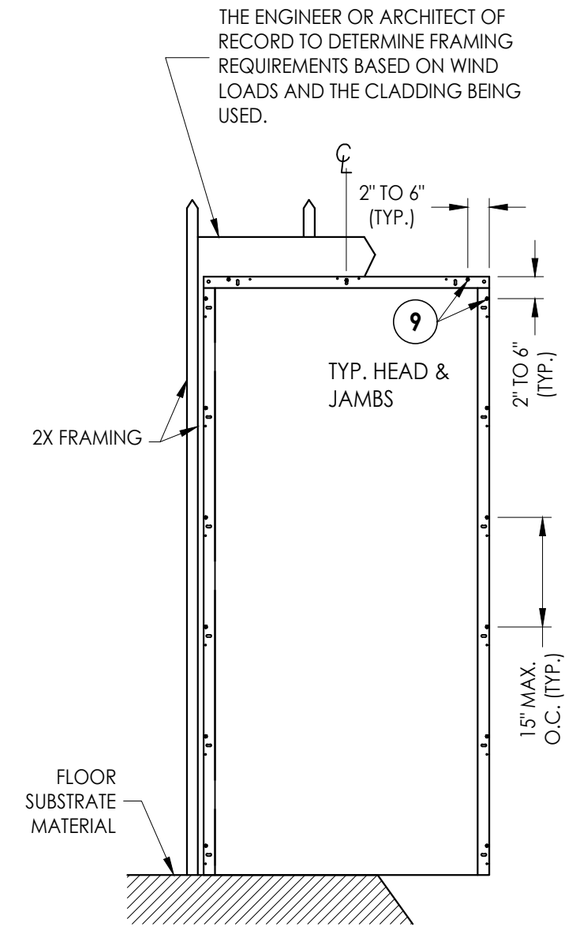

FRAME ANCHORING
STUD CONSTRUCTION

CONCRETE ANCHOR NOTES:

1. *Concrete anchor locations at the corners may be adjusted to maintain the min. edge distance to mortar joints.*
2. *Concrete anchor locations noted as "MAX. ON CENTER" must be adjusted to maintain the min. edge distance to mortar joints, additional concrete anchors may be required to ensure the "MAX. ON CENTER" dimension are not exceeded.*
3. *Concrete anchor table:*

ANCHOR TYPE	ANCHOR SIZE	MIN. EMBEDMENT	MIN. CLEARANCE TO MASONRY EDGE	MIN. CLEARANCE TO ADJACENT ANCHOR
ITW TAPCON®	1/4"	1-1/4"	2"	4"
DeWALT ULTRACON+®	1/4"	1-1/4"	1"	4"

WOOD SCREW INSTALLATION NOTES:

1. *Maintain a minimum 5/8" edge distance, 1" end distance, & 1" o.c. spacing of wood screws to prevent the splitting of wood.*

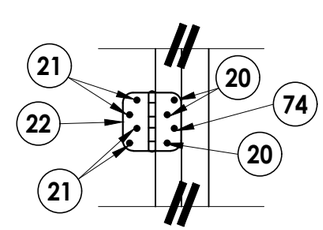

HINGE DETAIL

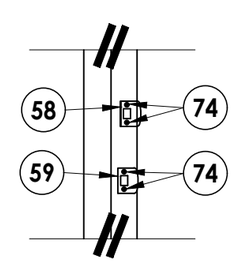

STRIKE DETAIL

Documents Prepared By:
Lyndon F. Schmidt
P.E. No. 43409
RW BUILDING CONSULTANTS, INC.
P.O. Box 230, Valrico, FL 33595
Phone No.: 813.659.9197
FBPE Registry No. 9813

PRODUCT: *DUNBARTON REDIFLEX TWO-PIECE STEEL FRAME*

PART OR ASSEMBLY: *BUCK & FRAME ANCHORING*

NO.	DATE	REVISIONS	BY
4	7/01/26	UPDATE TO 9TH ED. (2026) FBC	LFS
3	7/06/23	UPDATE TO 8TH ED. (2023) FBC	LFS
2	8/11/20	UPDATE TO 7TH ED. (2020) FBC	DAC
1	9/30/17	UPDATE TO 6TH ED. (2017) FBC	LFS

DATE: 3/30/15
SCALE: N.T.S.
DWG. BY: JK
CHK. BY: LFS
DRAWING NO.: FL-15341.10
SHEET 6 OF 7

© 2015 R.W. BUILDING CONSULTANTS INC.

G:\2023 FBC Drawings 1.26.26\Dunbarton Corp\FL-15341 R10 Rediflex\FL-15341.9-10.dwg

BILL OF MATERIALS

ITEM	DESCRIPTION	MATERIAL
B	2X BUCK SG >= 0.55	WOOD
E	MASONRY - 3,000 PSI MIN. CONCRETE CONFORMING TO ACI 301 OR HOLLOW BLOCK CONFORMING TO ASTM C90 OR ASTM A653 STEEL	CONCRETE
P	1/4" X 2-3/4" DeWALT OR ITW PFH CONCRETE SCREW	STEEL
9	#8 X 1-1/2" PPH SMS (7/8" MIN. EMBEDMENT)	STEEL
11	HINGE & LATCH STILE	CELLULAR PVC
12	CONTINUOUS LATCH AND HINGE STILE REINFORCEMENT	LVL
13	BOTTOM RAIL	CELLULAR PVC
14	TOP RAIL	CELLULAR PVC
15	DOOR SKIN (MIN. 0.075" THICK) BY NAN YA	FIBERGLASS
16	POLYURETHANE FOAM BY NAN YA	POLYURETHANE
20	10-24 X 1/2" FLAT HEAD SCREW	STEEL
21	#9 X 1" PFH WOOD SCREW	STEEL
22	HINGE 4" X 4"	STEEL
23	#8 X 1" PH SMS (7/8" MIN. EMBEDMENT)	STEEL
29	JAMB HINGE REIN. 14 GA. 4" x 4" x 1.53" (.075" GALV. STEEL) BY DUNBARTON FR00505	STEEL
30	COMPRESSION WEATHERSTRIPPING QLON QDS 650 BY SCHLEGEL	FOAM
41	REDIFLEX JAMB BASE 18 GA. MIN. (.042" GALV. STEEL) BY DUNBARTON	STEEL
42	REDIFLEX JAMB CLOSURE 22 GA. MIN. (.026" GALV. STEEL) BY DUNBARTON	STEEL
45	REINFORCEMENT WOOD FOR LOCKS	WOOD
50	FIBERGLASS DOOR PANEL: BY PLASTPRO INC./ NAN YA PLASTICS CORP.	-
51	INSWING HIGH DAM THRESHOLD BY ENDURA ZAI4566	ALUMINUM
52	DOOR BOTTOM SWEEP	VINYL
55	OUTSWING BUMP THRESHOLD 4.563" x 1.446" BY ENDURA ZFOB4566F	ALUMINUM
56	OUTSWING ADA THRESHOLD BY ENDURA ZHCO5622	ALUMINUM
57	INSWING ADA THRESHOLD BY ENDURA ZHCI4562	ALUMINUM
58	STRIKE PLATE - DEADBOLT	STEEL
59	STRIKE PLATE - LATCHBOLT	STEEL
60	KWIKSET SERIES (660) DEADBOLT	STEEL
61	KWIKSET SERIES PASSAGE LOCK	STEEL
73	2X FRAMING (SG >= 0.42)	WOOD
74	#8 x 1-3/4" PFH SMS	STEEL

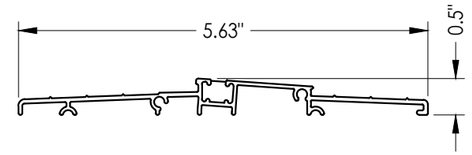

56 OUTSWING THRESHOLD

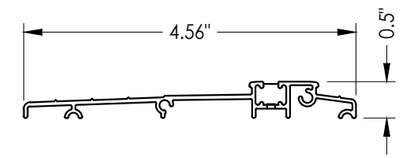

57 INSWING THRESHOLD

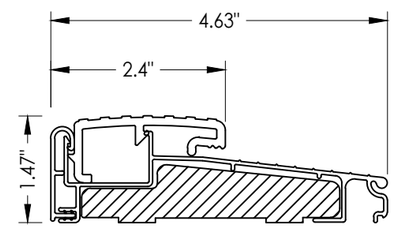

55 OUTSWING THRESHOLD

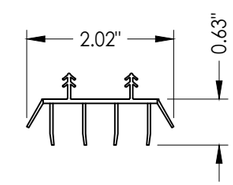

52 SWEEP

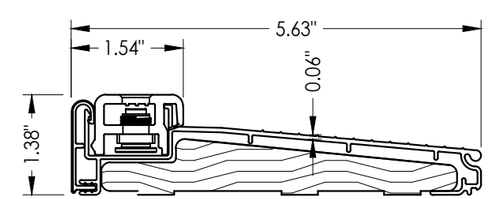

51 INSWING THRESHOLD

Documents Prepared By:
Lyndon F. Schmidt
P.E. No. 43409

RW BUILDING CONSULTANTS, INC.
P.O. Box 230, Valrico, FL 33595
Phone No.: 813.659.9197
FBPE Registry No. 9813

PRODUCT: DUNBARTON REDIFLEX TWO-PIECE STEEL FRAME

PART OR ASSEMBLY: BILL OF MATERIALS & COMPONENTS

REVISIONS

NO.	DATE		BY
4	7/01/26	UPDATE TO 9TH ED. (2026) FBC	LFS
3	7/06/23	UPDATE TO 8TH ED. (2023) FBC	LFS
2	8/11/20	UPDATE TO 7th ED. (2020) FBC	DAC
1	9/30/17	UPDATE TO 6TH ED. (2017) FBC	LFS

DATE: 3/30/15
SCALE: N.T.S.
DWG. BY: JK
CHK. BY: LFS
DRAWING NO.: FL-15341.10
SHEET 7 OF 7

© 2015 R.W. BUILDING CONSULTANTS INC.

G:\2023 FBC Drawings 1.26.26\Dunbarton Corp\FL-15341 R10 Rediflex\FL-15341.9-10.dwg